ASLP™ - 3.5,
Superior Anterior Clavicle Plates, and Superior Anterior Clavicle Plates with lateral extension.

Miraclus® Implanting LIFE

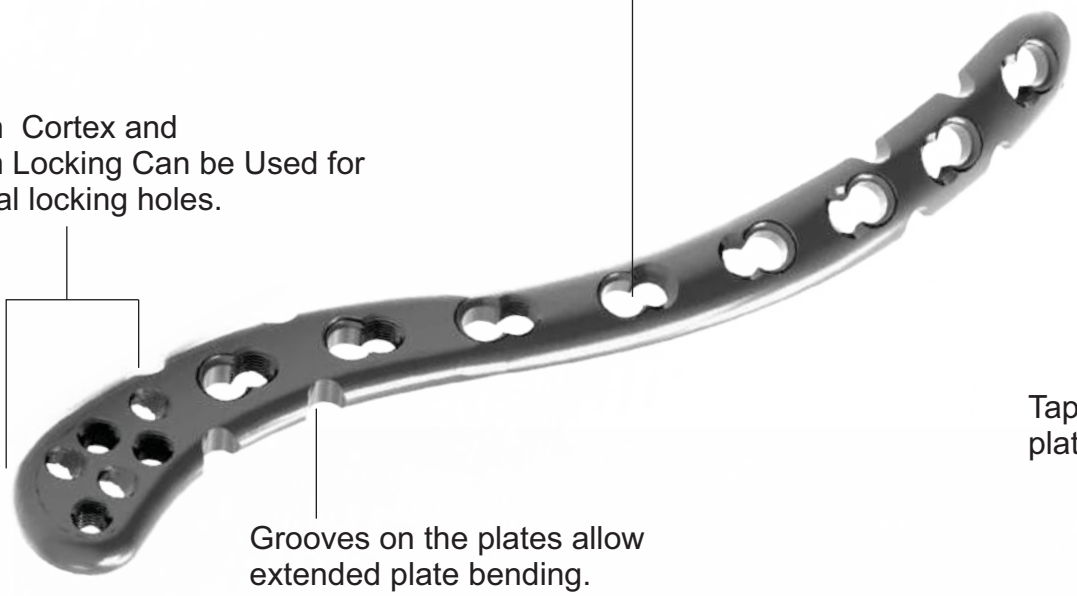

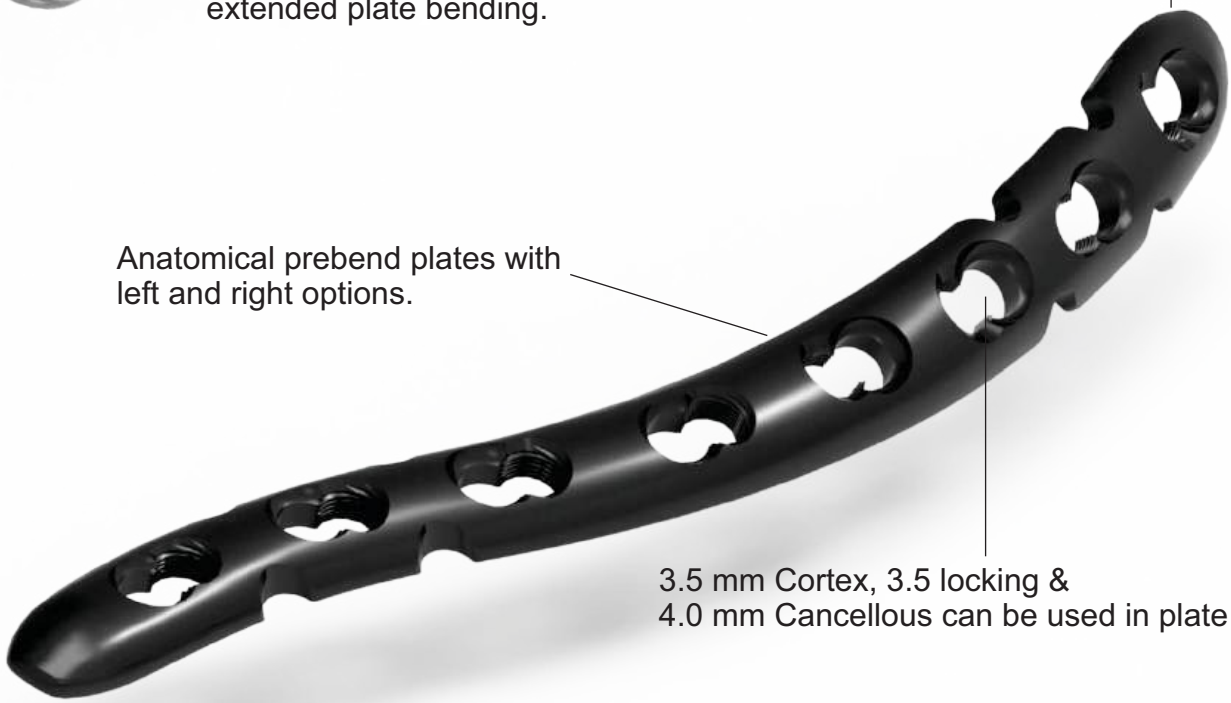

ASLP ™ - 3.5,
Superior Anterior Clavicle Plates, and Superior Anterior Clavicle Plates with lateral extension.

Miraclus®
Implanting LIFE

3.5 mm ASLP Superior Anterior Clavicle Plates.

Titanium	Shaft holes	
PT103.06.01	6	right
PT103.06.02	6	left
PT103.07.01	7	right
PT103.07.02	7	left
PT103.08.01	8	right
PT103.08.02	8	left

3.5 mm ASLP Superior Anterior Clavicle Plates with lateral extension.

Titanium	Shaft holes	
PT104.03.01	3	right
PT104.03.02	3	left
PT104.04.01	4	right
PT104.04.02	4	left
PT104.05.01	5	right
PT104.05.02	5	left
PT104.06.01	6	right
PT104.06.02	6	left
PT104.07.01	7	right
PT104.07.02	7	left
PT104.08.01	8	right
PT104.08.02	8	left